RoHS

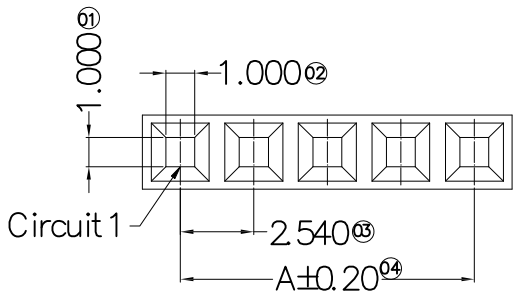

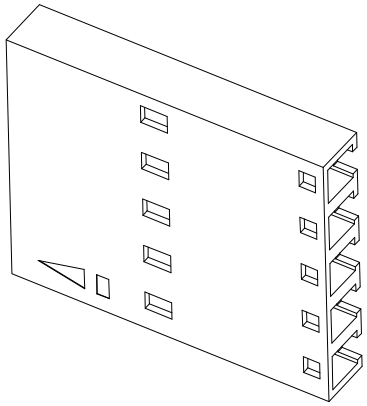

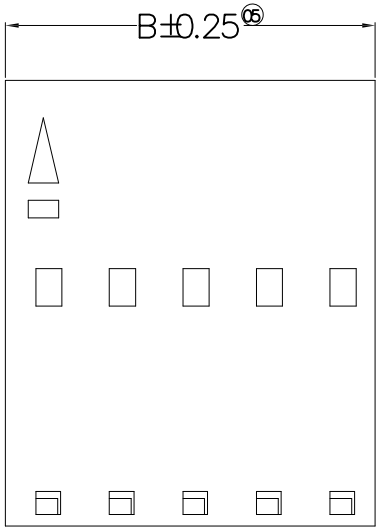

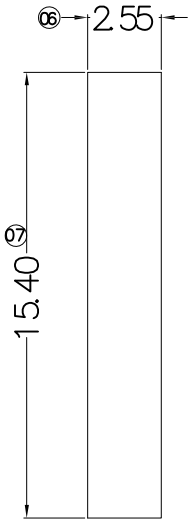

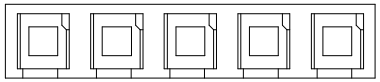

■ Specifications :

- Voltage rating: 250V AC/DC
- Current rating: 3A AC/DC
- Withstanding voltage: 1500V AC/minute
- Temperature range: -25°C~+85°C
- Insulation resistance: ≥1 000MΩ
- Contact resistance: ≤20mΩ
- After environmental testing: ≤30mΩ
- Suitable GYA Terminal: A2545T
- Mates With GYA Wafer: A2545W

A2545H X-XX X-N0 XX
① ② ③ ④ ⑤ ⑥ ⑦

① Series No.
② Category: H-HSG
③ Appearance type: Blank-Ordinary
④ Row No.-Pin No.: XX-02P~15P
⑤ Special No.:
⑥ Material: N0-PA66 UL 94V-0
⑦ Color: Blank-Natural Color

Poles	Dimensions (mm)		Poles	Dimensions (mm)	
	A	B		A	B
02	2.54	5.15	09	20.32	22.93
03	5.08	7.69	10	22.86	25.47
04	7.62	10.23	11	25.40	28.01
05	10.16	12.77	12	27.94	30.55
06	12.70	15.31	13	30.48	33.09
07	15.24	17.85	14	33.02	35.63
08	17.78	20.39	15	35.56	38.17

DATE	REV	ECN NO	DESCRIPTION	MODIFY	APPROVAL

GENERAL TOLERANCE
.X ±0.35
.XX ±0.25
.XXX ±0.15
X° ±2°
PROJECT

GYA Connectors 东莞市国亚电子有限公司
DONGGUO GUOYA ELECTRONICS CO.,LTD

APPROVAL	CHECK	DRAWN	DATE
Yangzhengguo	Yangjinyi	Lvtiansheng	2007/05/03

PART NO.: A2545H-XX-N0

TITLE: 2.54mm Crimp Style Connectors

UNIT	SCALE	SHEET	REV	NUMBER
mm	1:1	1/1	A	A-022

RoHS

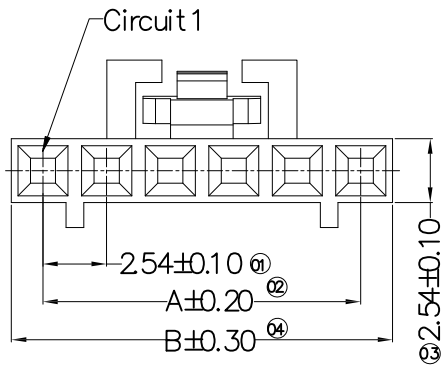

P~20P ~~~Shape
Scale 1:1

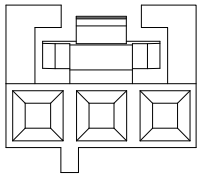

P ~~~Shape
Scale 1:1

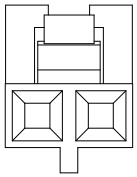

P ~~~Shape
Scale 1:1

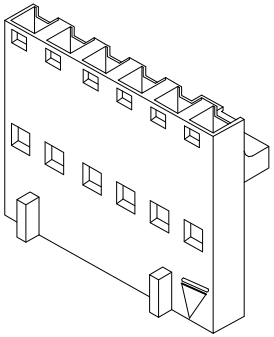

■ Specifications :

- Voltage rating: 250V AC/DC
- Current rating: 3A AC/DC
- Withstanding voltage: 1500V AC/minute
- Temperature range: -25°C~+85°C
- Insulation resistance: ≥1000MΩ
- Contact resistance: ≤20mΩ
- After environmental testing: ≤30mΩ
- Suitable GYA Terminal: A2545T
- Mates With GYA Wafer: A2545W

A2545 H X-XX B-N0 XX
① ② ③ ④ ⑤ ⑥ ⑦

① Series No.
② Category: H-HSG
③ Welding Board Angle: Blank-ordinary
④ Row No.-Pin No.: XX-Single row
⑤ Special No.
B-There are convex point and the buckle
⑥ Material: N0-PA66 94V-0
⑦ Color:
Blank-Natural Color
HF-Halogen free

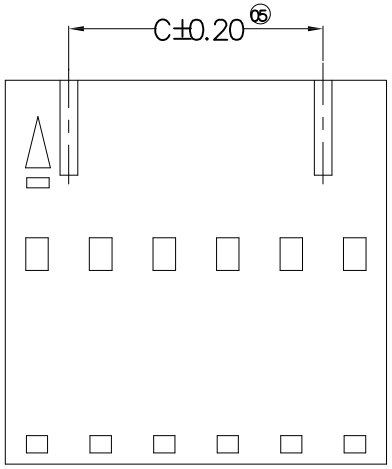

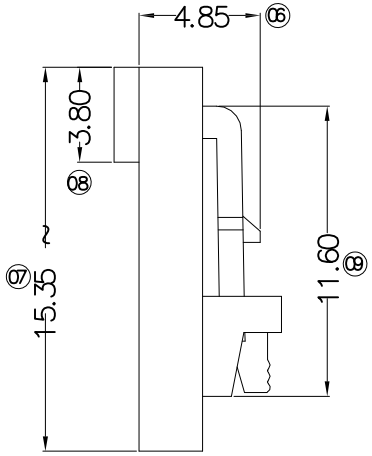

3P~20P

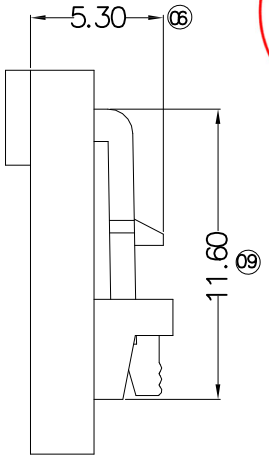

2P

Poles	Dimensions(mm)			Poles	Dimensions(mm)		
	A	B	C		A	B	C
02	2.54	5.08	—	12	27.94	30.48	25.40
03	5.08	7.62	—	13	30.48	33.02	27.94
04	7.62	10.16	5.08	14	33.02	35.56	30.48
05	10.16	12.70	7.62	15	35.56	38.10	33.02
06	12.70	15.24	10.16	16	38.10	40.64	35.56
07	15.24	17.78	12.70	17	40.64	43.18	38.10
08	17.78	20.32	15.24	18	43.18	45.72	40.64
09	20.32	22.86	17.78	19	45.72	48.26	43.18
10	22.86	25.40	20.32	20	48.26	50.80	45.72
11	25.40	27.94	22.86				

DATE	REV	ECN NO	DESCRIPTION	MODIFY	APPROVAL

GENERAL TOLERANCE
.X ±0.35
.XX ±0.25
.XXX ±0.15
X° ±2°
PROJECT

GYA Connectors 东莞市国亚电子有限公司 DONGGUO GUOYA ELECTRONICS CO.,LTD

APPROVAL	CHECK	DRAWN	DATE
Yangzhengguo	Yangjinyi	Lvtiansheng	2014/08/04

PART NO. A2545H-XXB-N0XX

TITLE 2.54 mm Crimp Style Connectors

UNIT	SCALE	SHEET	REV	NUMBER
mm	1:1	1/1	A	A-022

RoHS

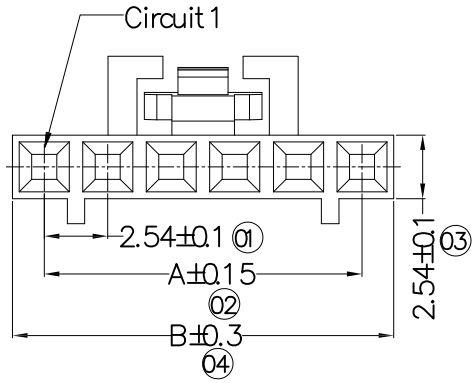

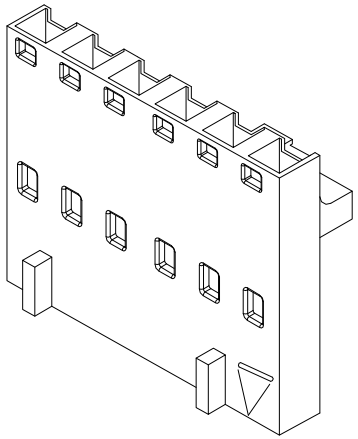

■ Specifications :

- Voltage rating: 250V AC/DC
- Current rating: 3A AC/DC
- Withstanding voltage: 1500V AC/minute
- Temperature range: -25°C~+85°C
- Insulation resistance: ≥1000MΩ
- Contact resistance: ≤20mΩ
- After environmental testing: ≤30mΩ

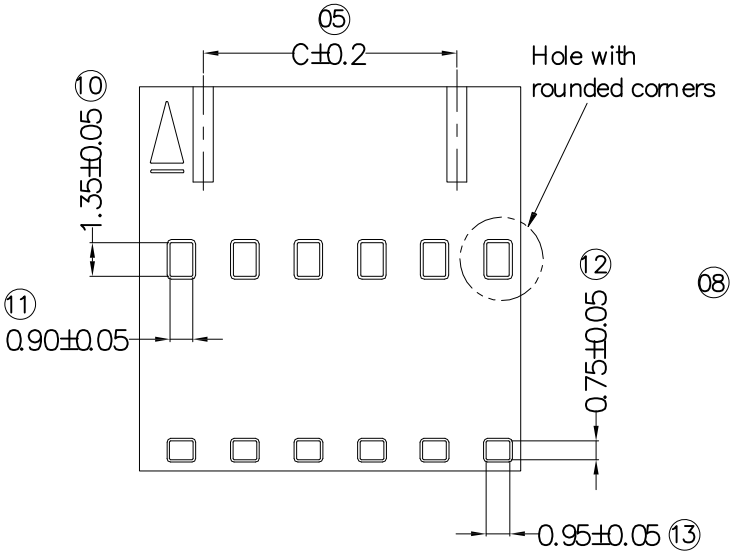

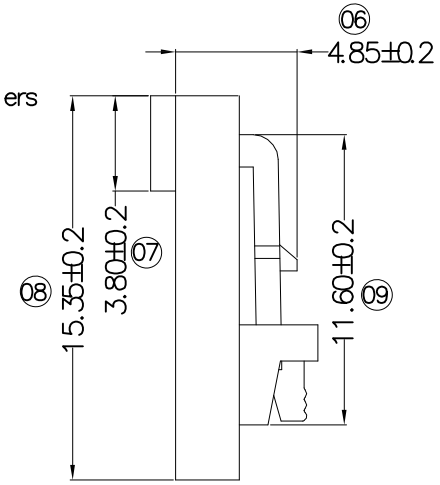

A2545 H X-XX C-N0 XX
⑴ ⑵⑶ ⑷ ⑸ ⑹ ⑺

⑴ Series No.
⑵ Category:
H-HSG
⑶ Welding Board Angle:
Blank-ordinary
⑷ Row No.-Pin No.:
XX-Single row
⑸ special No.
C-Hole with rounded corners
⑹ Material:
N0-PA66 94V-0
⑺ Color:
Blank-Natural Color
HF-Halogen free

Poles	Dimensions (mm)		
	A	B	C
2	2.54	5.08	—
3	5.08	7.62	2.54
4	7.62	10.16	5.08
5	10.16	12.70	7.62
6	12.70	15.24	10.16
7	15.24	17.78	12.70
8	17.78	20.32	15.24
9	20.32	22.86	17.78
10	22.86	25.40	20.32
11	25.40	27.94	22.86
12	27.94	30.48	25.40
13	30.48	33.02	27.94
14	33.02	35.56	30.48
15	35.56	38.10	33.02
16	38.10	40.64	35.56
17	40.64	43.18	38.10
18	43.18	45.72	40.64
19	45.72	48.26	43.18
20	48.26	50.80	45.72

PART NO	Material	Suitable GYA Terminal	Mates With GYA Wafer
A2545H-XXC-N0HF	Nylon 66 UL 94V-0 Halogen Free	A2545T	A2545W
A2545H-XXC-N0	Nylon 66 UL 94V-0		

DATE	REV	ECN NO	DESCRIPTION	MODIFY	APPROVAL

GENERAL TOLERANCE
.X ±0.35
.XX ±0.25
.XXX ±0.15
X° ±2°
PROJECT

GYA Connectors 东莞市国亚电子有限公司 DONGGUO GUOYA ELECTRONICS CO.,LTD

APPROVAL	CHECK	DRAWN	DATE
Yangzhengguo	Yangjinyi	Lvtiansheng	2013/12/20

PART NO. A2545H-XXC-N0XX

TITLE 2.54 mm Crimp Style Connectors

UNIT	SCALE	SHEET	REV	NUMBER
mm	1:1	1/1	A	A-022

RoHS

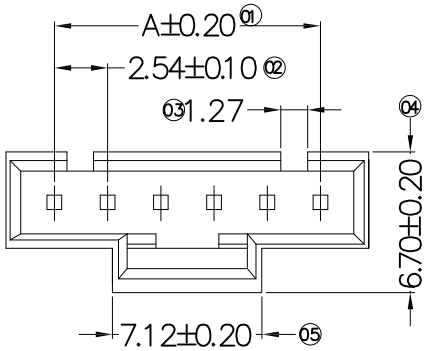

4P–25P

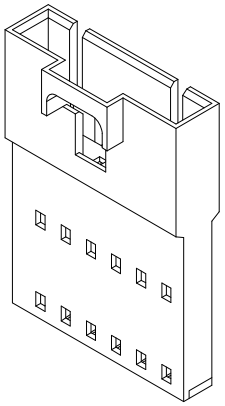

Specifications :

- Voltage rating: 250V AC/DC
- Current rating: 3A AC/DC
- Withstanding voltage: 1500V AC/minute
- Temperature range: -25°C~+85°C
- Insulation resistance: ≥1000MΩ
- Contact resistance: ≤20mΩ
- After environmental testing: ≤30mΩ
- Suitable GYA Terminal: A2545TM
- Mates With GYA Housing: A2545H

A2545 H F–XX X–XX XX
① ② ③ ④ ⑤ ⑥ ⑦

① Series No.
② Category: H–HSG
③ Welding Board Angle: F–Fmale HGS
④ Row No.–Pin No.: XX–Single row
⑤ Special No.
⑥ Material: PT–PBT 94V–0; NO–PA66 94V–0
⑦ Color: Blank–Natural Color

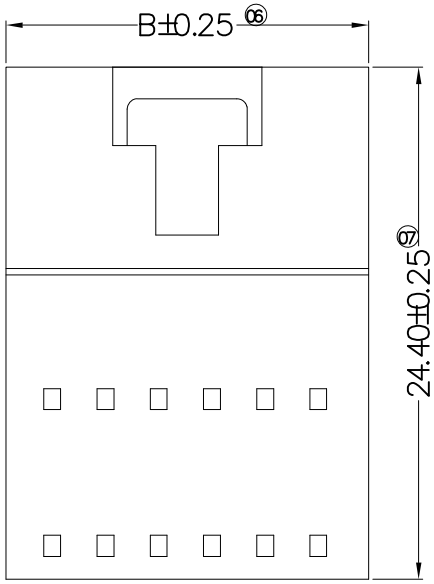

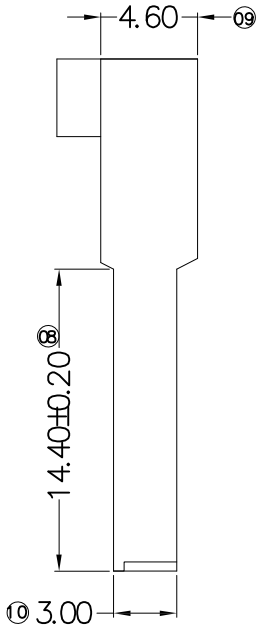

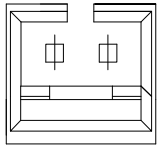

2P

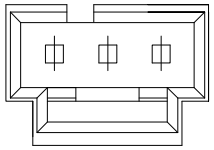

3P

Poles	Dimensions (mm)		Poles	Dimensions (mm)		Poles	Dimensions (mm)	
	A	B		A	B		A	B
02	2.54	7.12	10	22.86	27.44	18	43.18	47.76
03	5.08	9.66	11	25.40	29.98	19	45.72	50.30
04	7.62	12.20	12	27.94	32.52	20	48.26	52.84
05	10.16	14.74	13	30.48	35.06	21	50.08	55.38
06	12.70	17.28	14	33.02	37.60	22	53.34	57.92
07	15.24	19.82	15	35.56	40.14	23	55.88	60.46
08	17.78	22.36	16	38.10	42.68	24	58.42	63.00
09	20.32	24.90	17	40.64	45.22	25	60.96	65.54

DATE	REV	ECN NO	DESCRIPTION	MODIFY	APPROVAL

GENERAL TOLERANCE
.X ±0.35
.XX ±0.25
.XXX ±0.15
X° ±2°
PROJECT

GYA Connectors 东莞市国亚电子有限公司 DONGGUO GUOYA ELECTRONICS CO.,LTD

APPROVAL	CHECK	DRAWN	DATE
Yangzhengguo	Yangjinyi	Lvtiansheng	2007/05/03

PART NO. A2545HF–XX–XX

TITLE 2.54mm Crimp Style Connectors

UNIT	SCALE	SHEET	REV	NUMBER
mm	1:1	1/1	A	A–022

RoHS

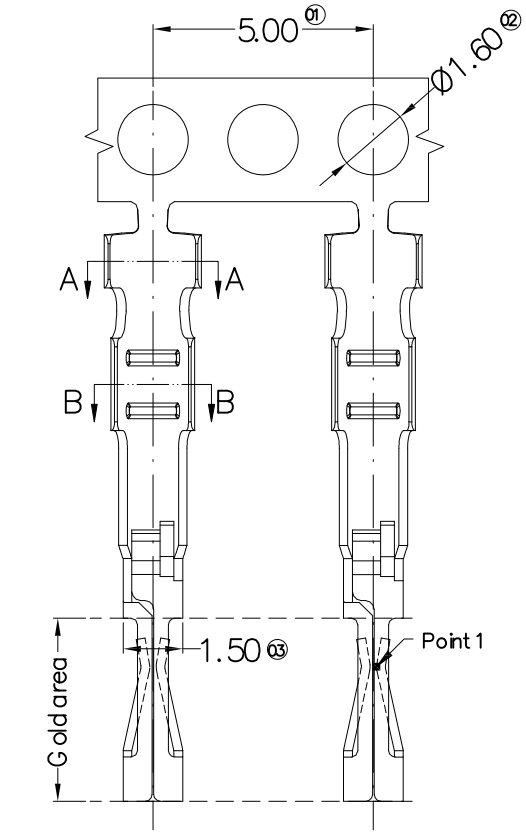

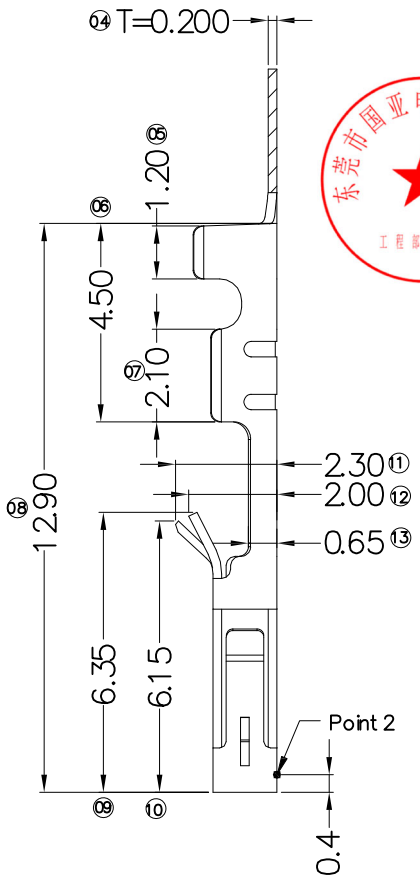

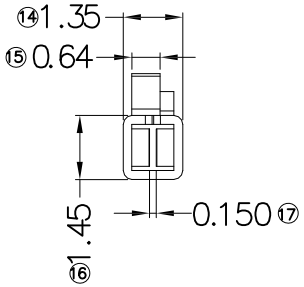

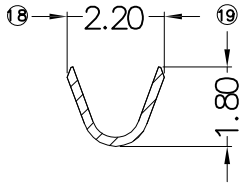

SECTION: A-A
SCALE: 1:1

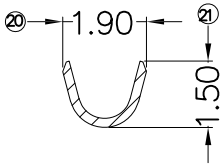

SECTION: B-B
SCALE: 1:1

■ Specifications :

- Voltage rating: 250V AC/DC
- Current rating: 3A AC/DC
- Withstanding voltage: 1500V AC/minute
- Temperature range: -25°C~+85°C
- Insulation resistance: ≥1000MΩ
- Contact resistance: ≤20mΩ
- After environmental testing: ≤30mΩ

A2545 T X-P XX X -X
① ② ③ ④ ⑤ ⑥ ⑦

① Series Number
② Category: T-terminal
③ Shape: Blank-Ordinary
④ Materid: P-Phosphor bronze
⑤ Plating style:
G30-Contact point gold 30u"(inside) Gold area 1u"(outside)
Other area Ni 20u"Min
G15-Contact point gold 15u"(inside) Gold area 1u"(outside)
Other area Ni 20u"Min
G01-Plated Contact Gold Flash
SN-Bright Tin Plating
⑥ Plating method:
⑦ Mold No./Mark/Special No.

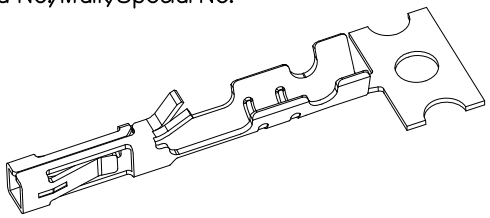

PART NO	Material	Wire Range	Insulation O.D.	Finish	Plating measuring point	Used In GYA Housing
A2545T-PG30	Phosphor Bronze	AWG#22-30	1.30mm(Max)	Stamping Before Plating:20u"Min.Ni; Contact Area Gold 30u" Min	Point 1	A2545H
A2545T-PG15				Stamping Before Plating:20u"Min. Ni; Contact Area Gold:15u" Min		
A2545T-PG01				Stamping Before Plating:50u"MIN.Ni; Contact Area Gold Flash	Point 2	
A2545T-PSN				Stamping Before Plating:50u"MIN.Ni; 100u"MIN.Sn		

DATE	REV	ECN NO	DESCRIPTION	MODIFY	APPROVAL

GENERAL TOLERANCE
.X ±0.35
.XX ±0.25
.XXX ±0.15
X° ±2°
PROJECT

GYA Connectors 东莞市国亚电子有限公司 DONGGUO GUOYA ELECTRONICS CO.,LTD

APPROVAL	CHECK	DRAWN	DATE
Yangzhengguo	Yangjinyi	Lvtiansheng	2015/08/17

PART NO. A2545T-PXXX

TITLE 2.54mm Crimp Style Connectors

UNIT	SCALE	SHEET	REV	NUMBER
mm	1:1	1/1	A	XXXX

RoHS

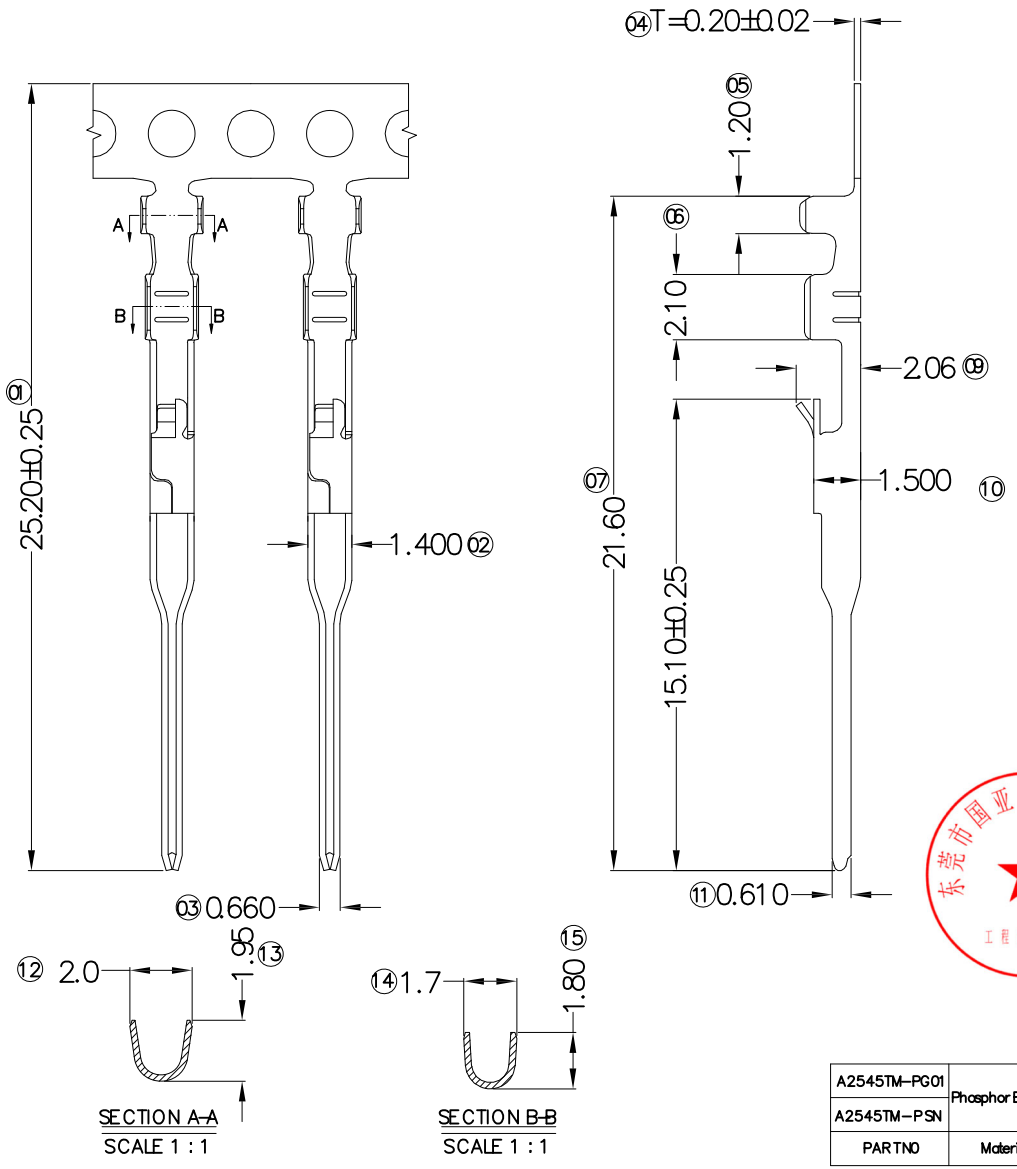

Specifications :

- Voltage rating: 250V AC/DC
- Current rating: 3A AC/DC
- Withstanding voltage: 1500V AC/minute
- Temperature range: −25°C~+85°C
- Insulation resistance: ≥1000MΩ
- Contact resistance: ≤20mΩ
- After environmental testing: ≤30mΩ

A2545 T M−P XX X−X
① ② ③ ④ ⑤ ⑥ ⑦

① Series Number
② Category: T−terminal
③ Shape: M−male
④ Material: P−Phosphor bronze
⑤ Plating style:
G01-Gold Plated Contact
SN-Bright tin plating
⑥ Plating method:
Blank−Stamping before plating
⑦ Mold No./Mark/Special No.

PART NO	Material	Wire Range	Insulation O.D.	Finish	Used In GYA Housing
A2545TM−PG01	Phosphor Bronze	AWG#22-26	1.58mm(Max)	Stamping Before Pating: 30U" Ni;Contact Area Gold Flash	A2545HF
A2545TM−PSN				Stamping Before Plating:30u"Ni;70u"Sn	

DATE	REV	ECN NO	DESCRIPTION	MODIFY	APPROVAL

GENERAL TOLERANCE
.X ±0.35
.XX ±0.25
.XXX ±0.15
X° ±2°
PROJECT

GYA Connectors 东莞市国亚电子有限公司 DONGGUO GUOYA ELECTRONICS CO.,LTD

APPROVAL	CHECK	DRAWN	DATE
Yangzhengguo	Yangjinyi	Lvtiansheng	2015/11/27

PART NO. A2545TM−PXXX

TITLE 2.54 mm Crimp Style Connectors

UNIT	SCALE	SHEET	REV	NUMBER
mm	1:1	1/1	A	A−022

RoHS

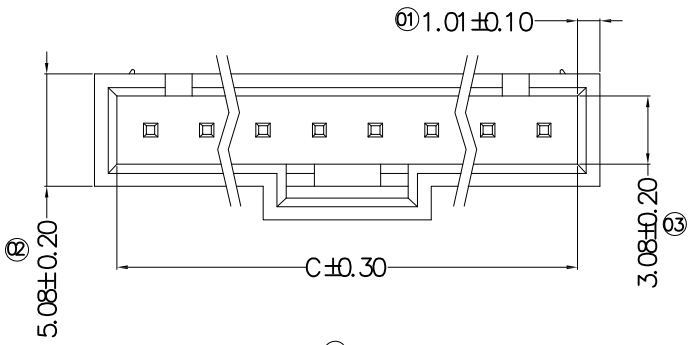

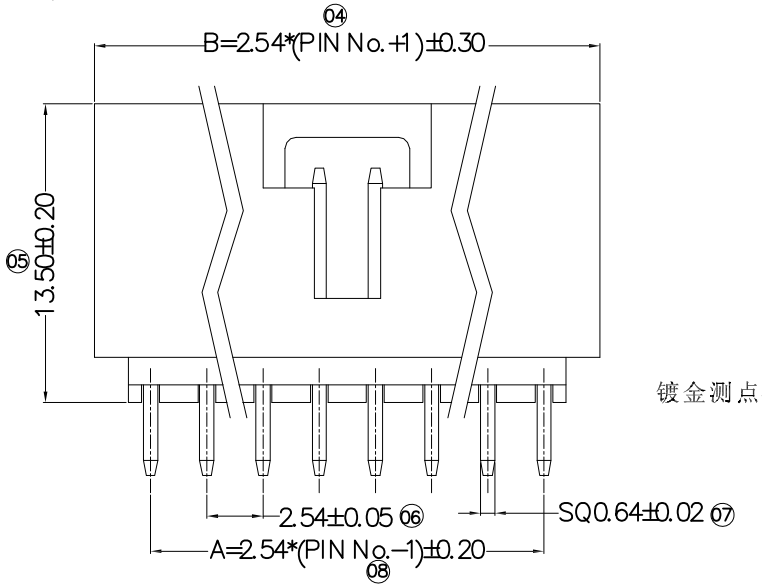

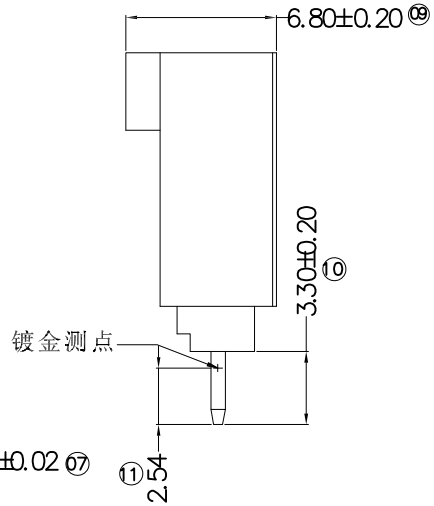

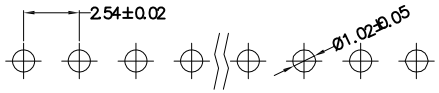

P.C.B LAYOUT

Specifications :

- Voltage rating: 250V AC / DC
- Current rating: 3A AC / DC
- Withstanding voltage: 1500V AC/minute
- Temperature range: -25°C~+85°C
- Insulation resistance: ≥1000MΩ
- Contact resistance: ≤20mΩ
- After environmental testing: ≤30mΩ

A2545 W V XX-XX H-N0XX XX
01 02 03 04 05 06 07 08 09

01 Series No.
02 Category:
W-wafer
03 Welding Board Angle:
V-180°
04 Welding Way:
Blank-DIP
05 Row No.-Pin No.
XX-Single row
06 Special NO.
H-With 90 degrees of shell
07 Material:
N0-PA66 94V-0
08 Planting Category:
V**:All Gold-Plated
*01 -Gold Flash; *02-2u"; *03-3u"; *05-5u"
*10-10u";*15-15U";*30-30U"; *50-50U"
SN-Bright tin plating 70U"
SN1-Bright tin plating 120U"Min. ;
SW-Fog Tin plating
09 Color:
Blank-natural color

Poles	Dimensions (mm)		
	A	B	C
2	2.54	7.62	5.59
3	5.08	10.16	8.13
4	7.62	12.70	10.67
5	10.16	15.24	13.21
6	12.70	17.78	15.75
7	15.24	20.32	18.29
8	17.78	22.86	20.83
9	20.32	25.40	23.37
10	22.86	27.94	25.91
11	25.40	30.48	28.45
12	27.94	33.02	30.99
13	30.48	35.56	33.53
14	33.02	38.10	36.07
15	35.56	40.64	38.61
16	38.10	43.18	41.15
17	40.64	45.72	43.69
18	43.18	48.26	46.23
19	45.72	50.80	58.77
20	48.26	53.34	51.31
21	50.80	55.88	53.85
22	53.34	58.42	56.39
23	55.88	60.96	58.93
24	58.42	63.50	61.48
25	60.96	66.04	64.01

PART NO	Material	Material(Pin)	Finish(Pin)	Mates With GYA Housing
A2545WV-XXH-N0V15	Nylon 66 UL 94V-0	Brass	Gold-Plated 1.5u"	A2545H
A2545WV-XXH-N0V01	Nylon 66 UL 94V-0	Brass	Gold-Flash	

DATE	REV	ECN NO	DESCRIPTION	MODIFY	APPROVAL

GENERAL TOLERANCE
.X ±0.35
.XX ±0.25
.XXX ±0.15
X° ±2°
PROJECT

GYA Connectors 东莞市国亚电子有限公司
DONGGUO GUOYA ELECTRONICS CO.,LTD

APPROVAL	CHECK	DRAWN	DATE
Yangzhengguo	Yangjinyi	Lvtiansheng	2007/05/03

PART NO. A2545WV-XXH-N0XX

TITLE 2.54 mm Crimp Style Connectors

UNIT	SCALE	SHEET	REV	NUMBER
mm	1:1	1/1	A	A-106

RoHS

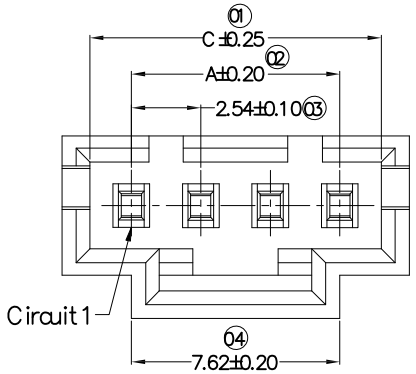

4P~25P

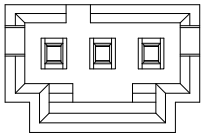

3P

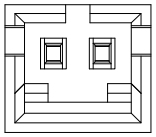

2P

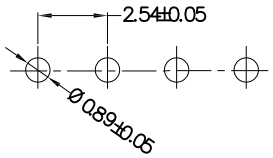

P.C.B LAYOUT

Specifications:

- Voltage rating: 250V AC/DC
- Current rating: 3A AC/DC
- Withstanding voltage: 1500V AC/minute
- Temperature range: -25°C~+85°C
- Insulation resistance: ≥1000MΩ
- Contact resistance: ≤20mΩ
- After environmental testing: ≤30mΩ

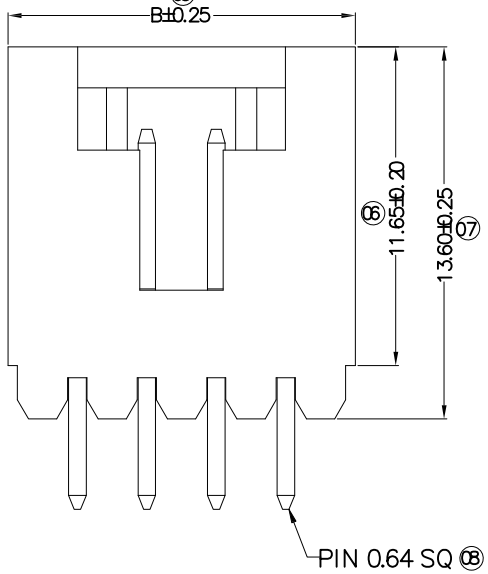

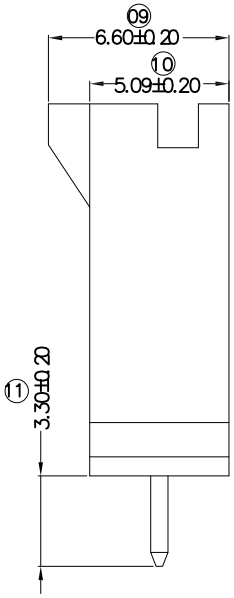

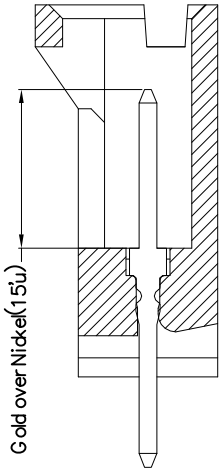

A2545 W V XX-XX T-N0XX XX
01 02 03 04 05 06 07 08 09

01 Series No.
02 Category:
W-wafer
03 Welding Board Angle:
V-180°
04 Welding Way:
Blank-DIP
05 Row No.-Pin No.
XX-Single row
06 Special NO.
T-Special Specifications
07 Material:
N0-PA66 94V-0
08 Planting Category:
V**: All Gold-Plated
*01-Gold Flash; *02-2u"; *03-3u"; *05-5u"
*10-10u"; *15-15u"; *30-30u"; *50-50u"
SN-Bright tin plating 70-120u"
SN1-Bright tin plating 120u"Min.;
SW-Fog Tin plating
09 Color:
Blank-natural color

Poles	Dimensions (mm)		
	A	B	C
2	2.54	7.62	5.59
3	5.08	10.16	8.13
4	7.62	12.70	10.67
5	10.16	15.24	13.21
6	12.70	17.78	15.75
7	15.24	20.32	18.29
8	17.78	22.86	20.83
9	20.32	25.40	23.37
10	22.86	27.94	25.91
11	25.40	30.48	28.45
12	27.94	33.02	30.99
13	30.48	35.56	33.53
14	33.02	38.10	36.07
15	35.56	40.64	38.61
16	38.10	43.18	41.15
17	40.64	45.72	43.69
18	43.18	48.26	46.23
19	45.72	50.80	58.77
20	48.26	53.34	51.31
21	50.80	55.88	53.85
22	53.34	58.42	56.39
23	55.88	60.96	58.93
24	58.42	63.50	61.48
25	60.96	66.04	64.01

PART NO	Material	Material (Pin)	Finish(Pin)	Mates With GYA Housing	Q'ty/Bag
A2545WV-XXT-N0V15	Nylon 66 UL 94V-0	Brass	Gold-Plated 15u"	A2545H	1,000Pcs
A2545WV-XXT-N0V01	Nylon 66 UL 94V-0	Brass	Gold-Flash		

DATE	REV	ECN NO	DESCRIPTION	MODIFY	APPROVAL

GENERAL TOLERANCE
.X ±0.35
.XX ±0.25
.XXX ±0.15
X° ±2°
PROJECT

GYA Connectors 东莞市国亚电子有限公司 DONGGUO GUOYA ELECTRONICS CO.,LTD

APPROVAL	CHECK	DRAWN	DATE
Yangzhengguo	Yangjinyi	Lvtiansheng	2013/06/03

PART NO. A2545WV-XXT-N0XX

TITLE 2.54 mm Crimp Style Connectors

UNIT	SCALE	SHEET	REV	NUMBER
mm	1:1	1/1	A	A-018

RoHS

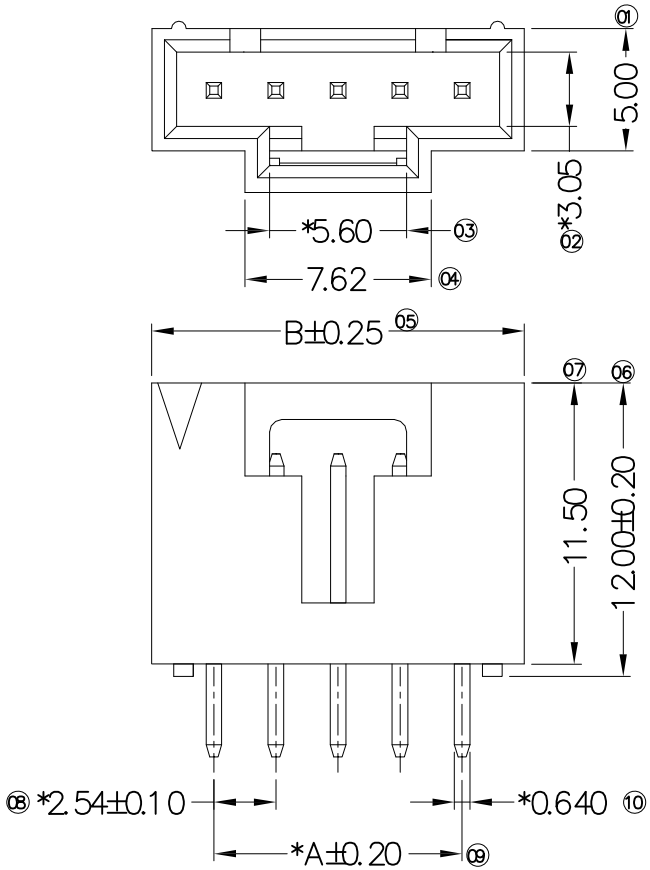

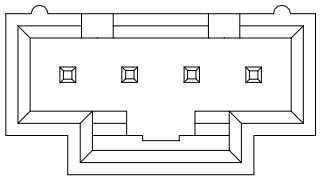

4P

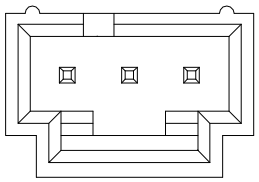

3P

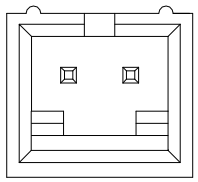

2P

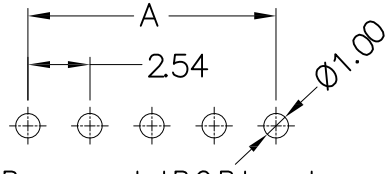

Recommended P.C.B Layout
General Tolerance±0.05

Pin位	尺寸 (mm) A	尺寸 (mm) B	Pin位	尺寸 (mm) A	尺寸 (mm) B
02	2.54	7.62	12	27.94	33.02
03	5.08	10.16	13	30.48	35.56
04	7.62	12.70	14	33.02	38.10
05	10.16	15.24	15	35.56	40.64
06	12.70	17.78	16	38.10	43.18
07	15.24	20.32	17	40.64	45.72
08	17.78	22.86	18	43.18	48.26
09	20.32	25.40	19	45.72	50.80
10	22.86	27.94	20	48.26	53.34
11	25.40	30.48			

■ Specifications：

- Voltage rating: 250V AC/DC
- Current rating: 3A AC/DC
- Withstanding voltage: 1000V AC/minute
- Temperature range: -25°C~+85°C
- Insulation resistance: ≥1000MΩ
- Contact resistance: ≤20mΩ
- After environmental testing: ≤30mΩ
- Material(Pin): Brass
- Mates With GYA Housing: A2545H

A2545W V X-XX X-XX V01 XX
① ②③④ ⑤⑥ ⑦ ⑧ ⑨

① Series No.
② Category: W-wafer
③ Welding Board Angle: V-Straight 180°
④ Welding Way: Blank-DIP
⑤ Row No.-Pin No.: XX-02P~24P
⑥ Special No.:
⑦ Material: N0-PA66 94V-0; 9T-PA9T 94V-0
⑧ Planting Category: V01-All Gold Flash
⑨ Color: Blank-Black color

DATE	REV	ECN NO	DESCRIPTION	MODIFY	APPROVAL

GENERAL TOLERANCE
.X ±0.30
.XX ±0.20
.XXX ±0.10
X° ±2°
PROJECT

GYA Connectors 东莞市国亚电子有限公司
DONGGUO GUOYA ELECTRONICS CO.,LTD

APPROVAL	CHECK	DRAWN	DATE
Yangzhengguo	Yangjinyi	Lvtiansheng	2018/09/04

PART NO. A2545WV-XX-XXV01
TITLE 2.54mm Crimp Style Connectors

UNIT	SCALE	SHEET	REV	NUMBER
mm	1:1	1/1	A	A-007

RoHS

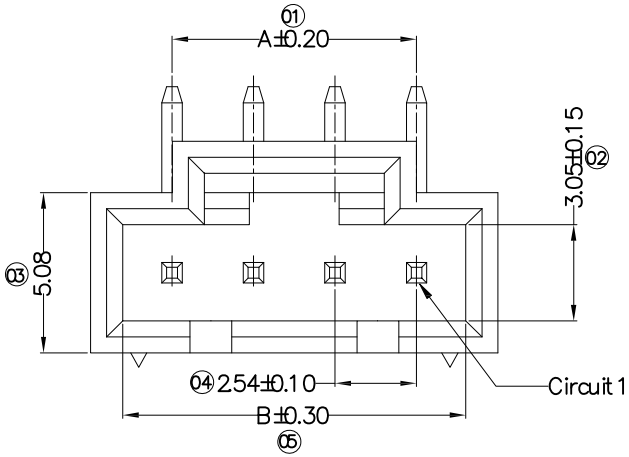

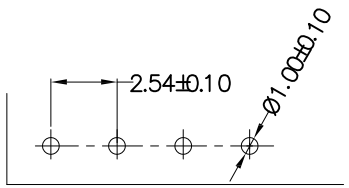

Recommand PCB Layout

■ Specifications :

- Voltage rating: 250V AC/DC
- Current rating: 3A AC/DC
- Withstanding voltage: 1500V AC/minute
- Temperature range: -25°C~+85°C
- Insulation resistance: ≥1000MΩ
- Contact resistance: ≤20mΩ
- After environmental testing: ≤30mΩ

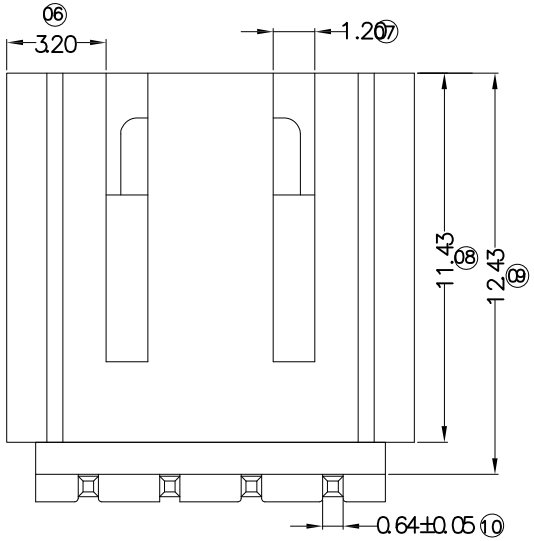

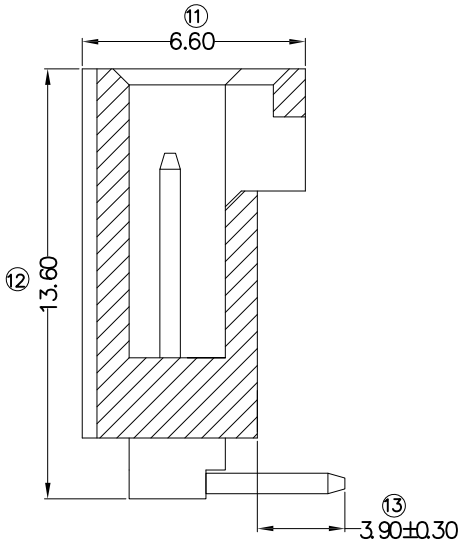

A2545 W R XX-XXRB-N0V01 XX
01 02 03 04 05 06 07 08 09

01 Series No.
02 Category:
W-wafer
03 Welding Board Angle:
R-90°
04 Welding Way:
Blank-DIP
05 Row No.-Pin No.
XX-Single row
06 Special NO.
RB-Reverse bending
07 Material:
N0-PA66 94V-0
08 Planting Category:
V**:All Gold-Plated
*01-Gold Flash ; *02-2u" ; *03-3u" ; *05-5u"
*10-10u" ; *15-15u"; *30-30u"; *50-50u"
SN-Bright tin plating 70u"
SN1-Bright tin plating 120u"Min. ;
SW-Fog Tin plating
09 Color:
Blank-natural color

Poles	Dimensions (mm)	
	A	B
2	2.54	5.59
3	5.08	8.13
4	7.62	10.67
5	10.16	13.21
6	12.70	15.75
7	15.24	18.29
8	17.78	20.83
9	20.32	23.37
10	22.86	25.91
11	25.40	28.45
12	27.94	30.99
13	30.48	33.53
14	33.02	36.07
15	35.56	38.61

PART NO	Materid	Material(Pin)	Finish(Pin)	Mates With GYA Housing
A2545WR-XXRB-N0V01	Nylon 66 UL 94V-0	Brass	Gold-Flash	A2545H

DATE	REV	ECN NO	DESCRIPTION	MODIFY	APPROVAL

GENERAL TOLERANCE
.X ±0.30
.XX ±0.20
.XXX ±0.10
X° ±2°
PROJECT

GYA Connectors 东莞市国亚电子有限公司
DONGGUO GUOYA ELECTRONICS CO.,LTD

APPROVAL	CHECK	DRAWN	DATE
Yangzhengguo	Yangjinyi	Lvtiansheng	2007/05/03

PART NO. A2545WR-XXRB-N0V01
TITLE 2.54mm Crimp Style Connectors

UNIT	SCALE	SHEET	REV	NUMBER
mm	1:1	1/1	A	A-011

RoHS

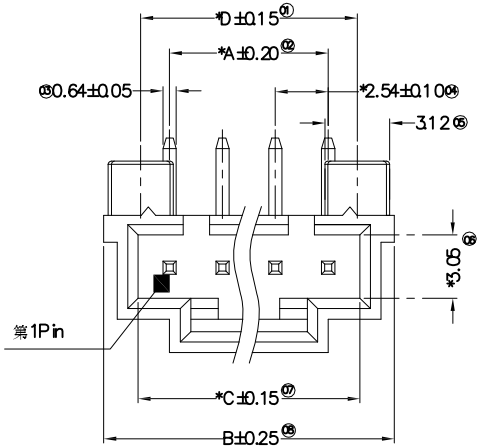

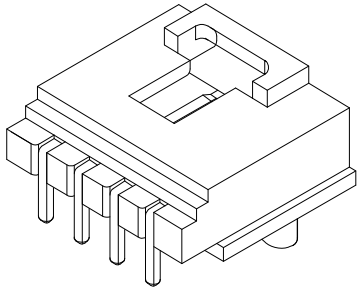

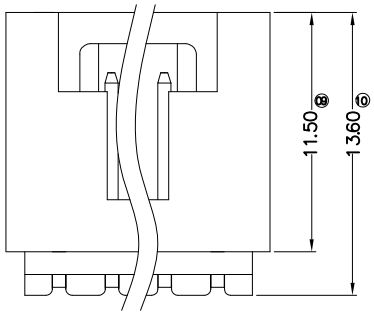

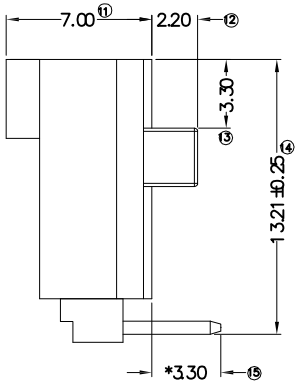

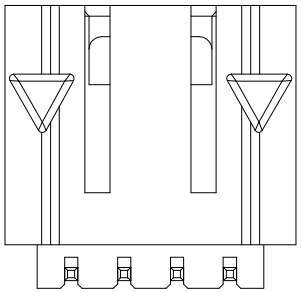

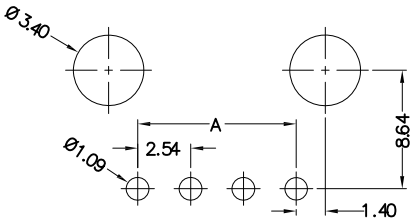

Recommended P.C.B Layout
General Tolerance±0.05

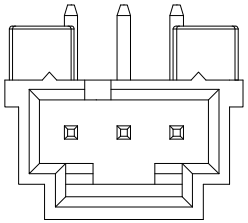

3Pin

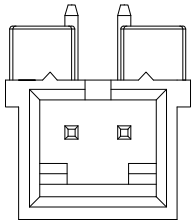

2Pin

规格：
1. 额定电压：250V AC/DC
2. 额定电流 3A AC/DC
3. 接触电阻：≤20mΩ
4. 环境测试后接触电阻：≤30mΩ
5. 绝缘电阻：≥1000MΩ
6. 耐压值：1500V AC/minute
7. 工作温度：-25°C~+85°C

备注：
1. Pin 针：黄铜
2. 产品不可缺PIN、歪PIN、长短PIN、PIN孔破裂、电镀层氧化、胶体压伤等外观不良
3. 标有"⊛"为FAI测量尺寸
4. 标记"*"表示需要控制的重点尺寸
5. Wafer 与 AYA A2545H-B系列 Housing 匹配

A2545 W R X-XX-P XX XX XX
① ② ③ ④ ⑤ ⑥ ⑦ ⑧ ⑨
① 系列.
② 类别：W－wafer类
③ 外观形态：R－90°
④ 成型方式：空码－DIP
⑤ PIN数：XX－单排
⑥ 特殊码：P－带柱
⑦ 材质：9T－PA9T 94V－0
⑧ 电镀类别：SN－镀镍30u"最小；镀亮锡:80u"最小
V01－镀镍30u"最小；镀金:0.8u"最小
⑨ 颜色：空码－黑色

Poles	Dimensions (mm)			
	A	B	C	D
02	2.54	8.89	5.58	5.33
03	5.08	11.43	8.13	7.87
04	7.62	13.97	10.67	10.41
05	10.16	16.51	13.21	12.95
06	12.70	19.05	15.75	15.49
07	15.24	21.59	18.29	18.03
08	17.78	24.13	20.83	20.57
09	20.32	26.67	23.37	23.11
10	22.86	29.21	25.91	25.65
11	25.40	31.75	28.45	28.19
12	27.94	34.29	30.99	30.73

DATE	REV	ECN NO	DESCRIPTION	MODIFY	APPROVAL

GENERAL TOLERANCE
.X ±0.20
.XX ±0.15
.XXX ±0.08
X° ±2°
PROJECT

GYA Connectors 东莞市国亚电子有限公司
DONGGUO GUOYA ELECTRONICS CO.,LTD

APPROVAL	CHECK	DRAWN	DATE
Yangzhengguo	Yangjinyi	Lvtiansheng	2019/06/29

A2545WR-XXP-XXXX
2.54 mm Crimp Style Connectors

UNIT	SCALE	SHEET	REV	NUMBER
mm	1:1	1/1	A	A-007

RoHS

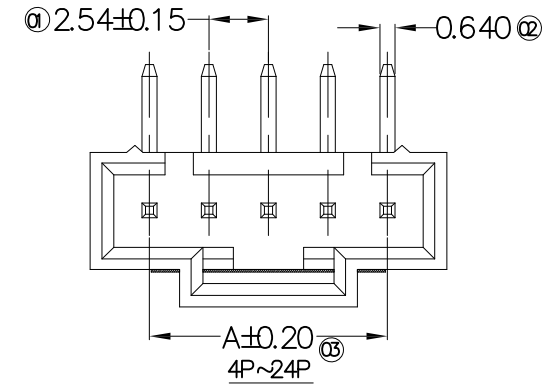

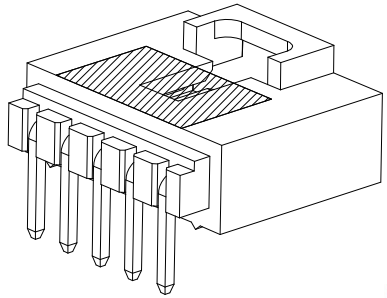

■Specifications :

- Voltage rating: 250V AC/DC
- Current rating: 3A AC/DC
- Withstanding voltage: 1500V AC/minute
- Temperature range: -25°C~+85°C
- Insulation resistance: ≥1000MΩ
- Contact resistance: ≤20mΩ
- After environmental testing: ≤30mΩ

A2545 W R X-XX W-4T XXX XX
① ② ③ ④ ⑤ ⑥ ⑦ ⑧ ⑨

① Series No.
② Category: W-wafer
③ Welding Board Angle: R-Right Angle 90°
④ Welding Way: Blank-DIP
⑤ Row No.-Pin No.: XX-02P~24P
⑥ Plug the Pin & Special No.: W-Mylar
⑦ Material: 4T-PA4T 94V-0;
⑧ Planting Category: V30-Platig Gold 30u"
SW-Plating Tin 100u"
⑨ Color: Blank-Black

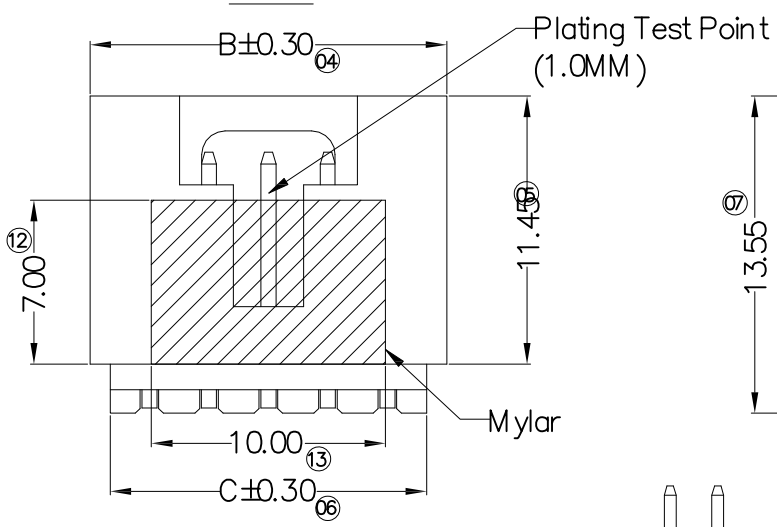

Recommended P.C.B Layout
General Tolerance±0.05

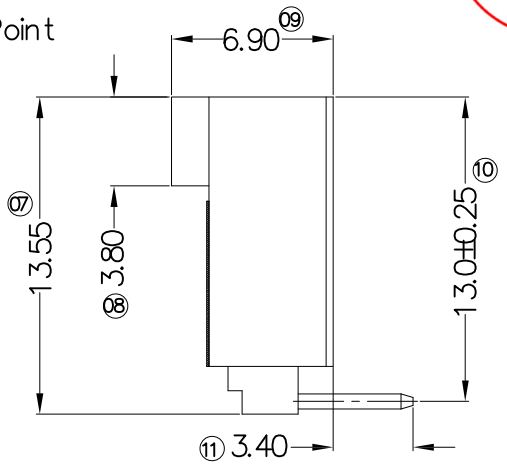

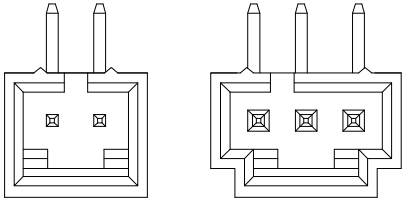

2P 3P

Poles	Dimensions (mm)			Poles	Dimensions (mm)		
	A	B	C		A	B	C
02	2.54	7.62	5.90	14	33.02	38.10	36.38
03	5.08	10.16	8.44	15	35.56	40.64	38.92
04	7.62	12.70	10.98	16	38.10	43.18	41.46
05	10.16	15.24	13.52	17	40.64	45.72	44.00
06	12.70	17.78	16.06	18	43.18	48.26	46.54
07	15.24	20.32	18.60	19	45.72	50.80	49.08
08	17.78	22.86	21.14	20	48.26	53.34	51.62
09	20.32	25.40	23.68	21	50.80	55.88	54.16
10	22.86	27.94	26.22	22	53.34	58.42	56.70
11	25.40	30.48	28.76	23	55.88	60.96	59.24
12	27.94	33.02	31.30	24	58.42	63.50	61.78
13	30.48	35.56	33.84				

PART NO	Material	Material(Pin)	Finish(Pin)	Mates With GYA Housing
A2545WR-XXW-4TSW	PA4T UL 94V-0 Halogen Free	Brass	Tin 100" Min Over Ni: 50u" Over	A2545H
A2545WR-XXW-4TV30			Gold-30u" Over Ni: 50u" Over	

DATE	REV	ECN NO	DESCRIPTION	MODIFY	APPROVAL

GENERAL TOLERANCE
.X ±0.30
.XX ±0.20
.XXX ±0.10
X° ±2°
PROJECT

GYA Connectors 东莞市国亚电子有限公司 DONGGUO GUOYA ELECTRONICS CO.,LTD

APPROVAL	CHECK	DRAWN	DATE
Yangzhengguo	Yangjinyi	Lvtiansheng	2018/05/19

PART NO. A2545WR-XXX-N0SNXX

TITLE 2.54mm Crimp Style Connectors

UNIT	SCALE	SHEET	REV	NUMBER
mm	1:1	1/1	A	A-000

RoHS

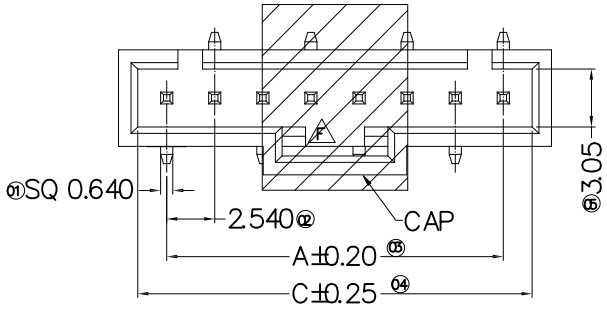

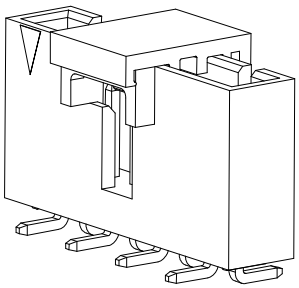

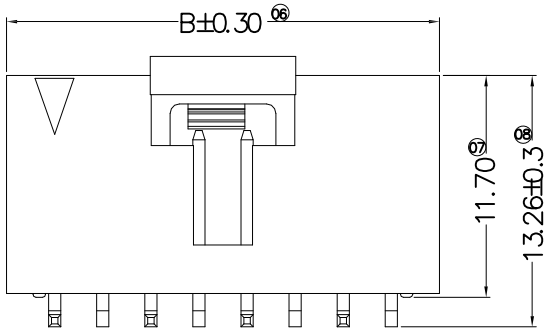

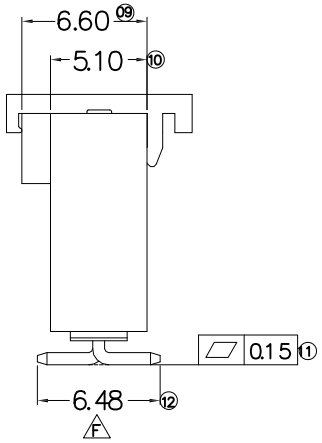

■ Specifications :

- Voltage rating: 250V AC/ DC
- Current rating: 3A AC/ DC
- Withstanding voltage: 1500V AC/minute
- Temperature range:−25°C~+85°C
- Insulation resistance: ≥1000MΩ
- Contact resistance: ≤20mΩ
- After environmental testing: ≤30mΩ
- Material(Pin):Brass
- Mates With GYA Housing: A2545H

A2545W V S−XXX−4T XX XX
① ② ③ ④ ⑤ ⑥ ⑦ ⑧ ⑨

①Series No.
②Category: W−WAFER
③ Welding Board Angle: V−Straight 180°
④ Welding Way: S−SMT
⑤Row No.−Pin No.: XX−02P~20P
⑥Special No.:
⑦Material: 4T−PA4T UL 94V−0
⑧Plating Category: V01−Gold Flash
SW−Matte Tin Plating(SN=100u"~180u"; Ni=30u"~100u")
⑨ Color: Blank−Natural Color Black

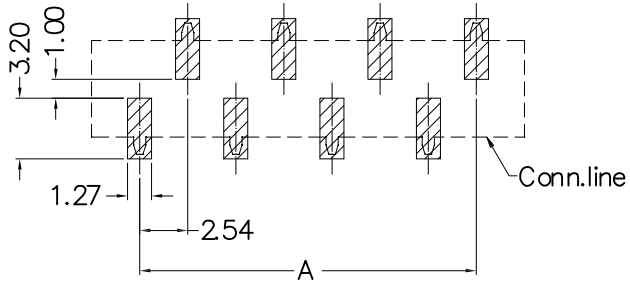

Recommended P.C.B Layout
General Tolerance±0.05

Poles	Dimensions (mm)			Poles	Dimensions (mm)		
	A	B	C		A	B	C
02	2.54	7.62	5.59	12	27.94	33.02	30.99
03	5.08	10.16	8.13	13	30.48	35.56	33.53
04	7.62	12.70	10.67	14	33.02	38.10	36.07
05	10.16	15.24	13.21	15	35.56	40.64	38.61
06	12.70	17.78	15.75	16	38.10	43.18	41.15
07	15.24	20.32	18.29	17	40.64	45.72	43.69
08	17.78	22.86	20.83	18	43.18	48.26	46.23
09	20.32	25.40	23.37	19	45.72	50.80	48.77
10	22.86	27.94	25.91	20	48.26	53.34	51.31
11	25.40	30.48	28.45				

DATE	REV	ECN NO	DESCRIPTION	MODIFY	APPROVAL

GENERAL TOLERANCE
.X ±0.30
.XX ±0.20
.XXX ±0.10
X° ±2°
PROJECT

GYA Connectors 东莞市国亚电子有限公司
DONGGUO GUOYA ELECTRONICS CO.,LTD

APPROVAL	CHECK	DRAWN	DATE
Yangzhengguo	Yangjinyi	Lvtiansheng	2007/05/03

PART NO. A2545WVS−XX−4TXX
TITLE 2.54mm Crimp Style Connector

UNIT	SCALE	SHEET	REV	NUMBER
mm	1:1	1/1	A	A−000

RoHS

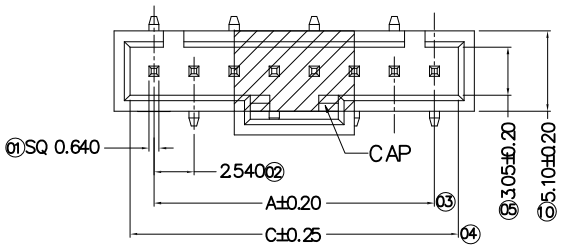

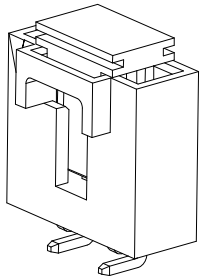

■ Specifications:

- Voltage rating: 250V AC/DC
- Current rating: 3A AC/DC
- Withstanding voltage: 1500V AC/minute
- Temperature range: −25°C ~ +85°C
- Insulation resistance: ≥1000MΩ
- Contact resistance: ≤20mΩ
- After environmental testing: ≤30mΩ
- Material(PIN): Brass
- Mates With GYA Housing A2545H

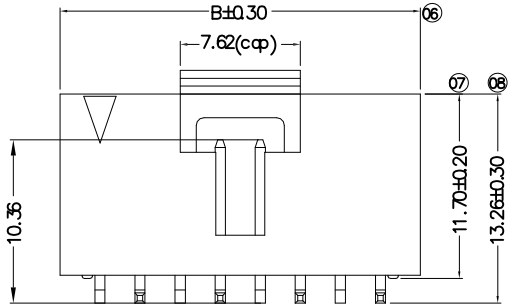

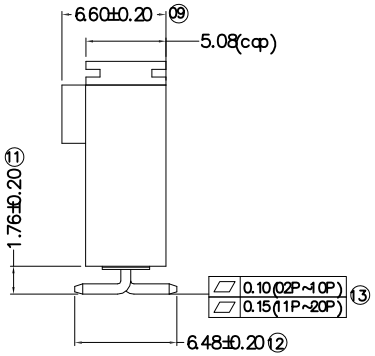

A2545W VS-XX B-4T XX XX
① ② ③ ④ ⑤ ⑥ ⑦ ⑧ ⑨

① Series No.
② Category: W-WAFER
③ Welding Board Angle: V-Straight 180°
④ Welding Way: S-SMT
⑤ Row No.-Pin No.: XX-02P~20P
⑥ Plug the Pin & Special No.: B-Reverse footprint
⑦ Material: 4T-PA4T UL 94V-0
⑧ Plating Category:
V30-All Gold 30u" Min. Over Ni: 50u" Min. Overall
V01-All Gold Flash Ni: 50u" Min. Overall
SW-Matted Tin 100u" Min. Ni: 50u" Min. Overall
⑨ Color: Blank-Black

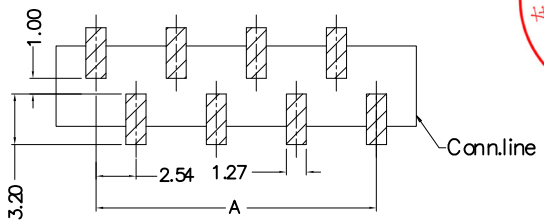

Recommended P.C.B Layout
General Tolerance ±0.05

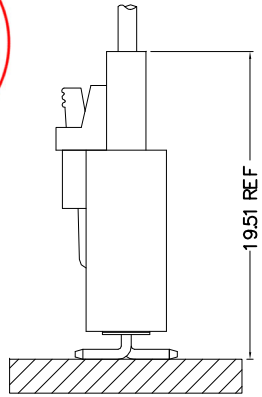

Mating Condition

Poles	Dimensions (mm)			Poles	Dimensions (mm)		
	A	B	C		A	B	C
02	2.54	7.62	5.59	12	27.94	33.02	30.99
03	5.08	10.16	8.13	13	30.48	35.56	33.53
04	7.62	12.70	10.67	14	33.02	38.10	36.07
05	10.16	15.24	13.21	15	35.56	40.64	38.61
06	12.70	17.78	15.75	16	38.10	43.18	41.15
07	15.24	20.32	18.29	17	40.64	45.72	43.69
08	17.78	22.86	20.83	18	43.18	48.26	46.23
09	20.32	25.40	23.37	19	45.72	50.80	48.77
10	22.86	27.94	25.91	20	48.26	53.34	51.31
11	25.40	30.48	28.45				

DATE	REV	ECN ON.	DESCRIPTION	MODIFY	APPROVAL

GENERAL TOLERANCE
.X ±0.35
.XX ±0.25
.XXX ±0.15
X.° ±0.2°
PROJECT

GYA Connectors 东莞市国亚电子有限公司 DONGGUO GUOYA ELECTRONICS CO.,LTD

APPROVAL	CHECK	DRAWN	DATE
Yangzhengguo	Yangjinyi	Lvtiansheng	2019/09/28

PART NO. A2545WVS-XXB-4TXX

TITLE 2.54mm Crimp Style Connector

UNIT	SCALE	SHEET	REV	NUMBER
mm	1:1	1/1	A	A-000

RoHS

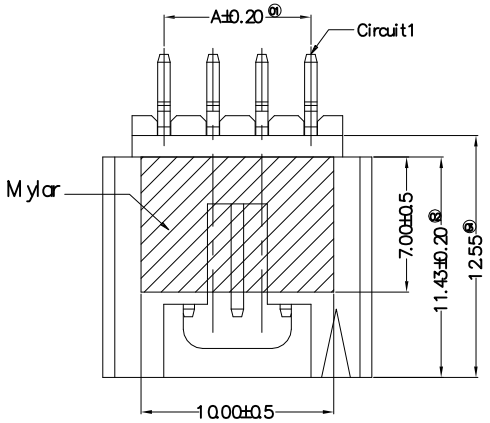

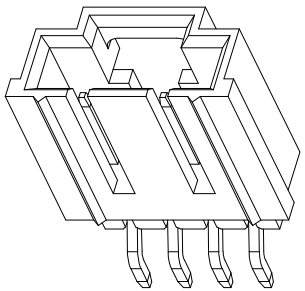

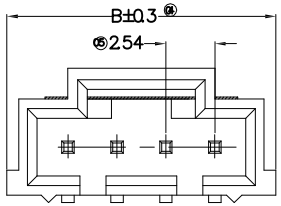

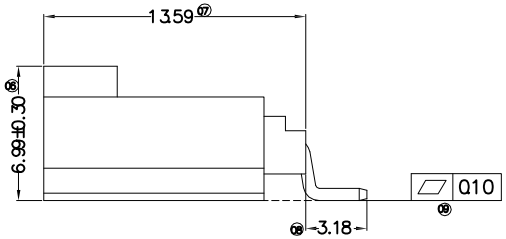

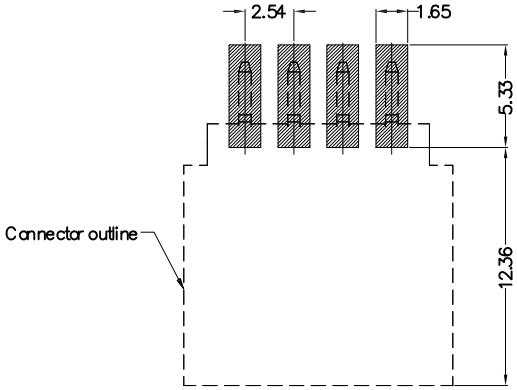

Recommended P.C.B Layout
General Tolerance±0.05

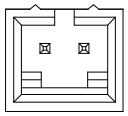

2P

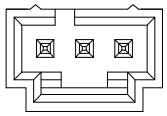

3P

■ Specifications:

- Voltage rating: 250V AC/DC
- Current rating: 3A AC/DC
- Withstanding voltage: 1500V AC/minute
- Temperature range: -25°C~+85°C
- Insulation resistance: ≥1000MΩ
- Contact resistance: ≤20mΩ
- After environmental testing: ≤30mΩ
- Material(Pin): Brass
- Mates With GYA Housing: A2545H

A2545 W R S-XX-B XX SW XX
① ②③④ ⑤ ⑥⑦ ⑧ ⑨

① Series No.
② Category: W-wafer
③ Welding Board Angle: R-90°
④ Welding Way: S-SMT
⑤ Row No.-Pin No.: XX-Single row
⑥ Special NO.: B-Without Post
⑦ Material: 4T-PA4T 94V-0
⑧ Planting Category:
SW-Matte Tin-Plated
⑨ Color: Blank-Natural Color Black

Poles	Dimensions (mm)		Poles	Dimensions (mm)	
	A	B		A	B
02	2.54	8.89	08	17.78	24.13
03	5.08	11.43	09	20.32	26.67
04	7.62	13.97	10	22.86	29.21
05	10.16	16.51	11	25.40	31.75
06	12.70	19.05	12	27.94	34.29
07	15.24	21.59			

DATE	REV	ECN NO	DESCRIPTION	MODIFY	APPROVAL

GENERAL TOLERANCE
.X ±0.30
.XX ±0.20
.XXX ±0.10
X° ±2°
PROJECT

GYA Connectors 东莞市国亚电子有限公司 DONGGUO GUOYA ELECTRONICS CO.,LTD

APPROVAL	CHECK	DRAWN	DATE
Yangzhengguo	Yangjinyi	Lvtiansheng	2017/03/21

PART NO. A2545WRS-XXB-4TSW

TITLE 2.54mm Crimp Style Connectors

UNIT	SCALE	SHEET	REV	NUMBER
mm	1:1	1/1	A	A-106