RoHS

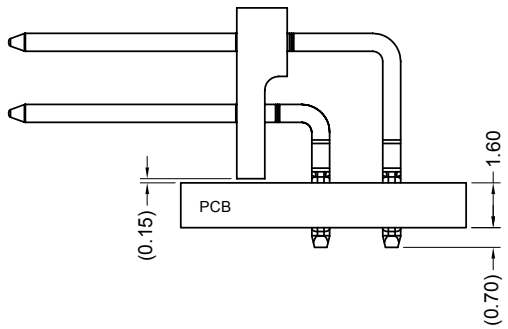

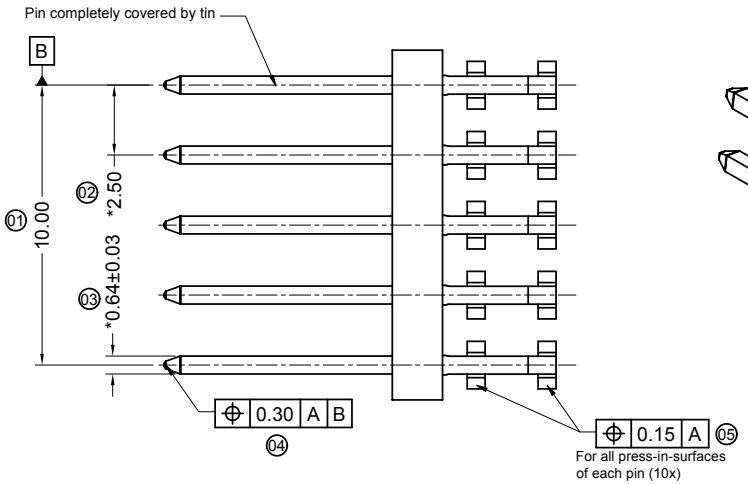

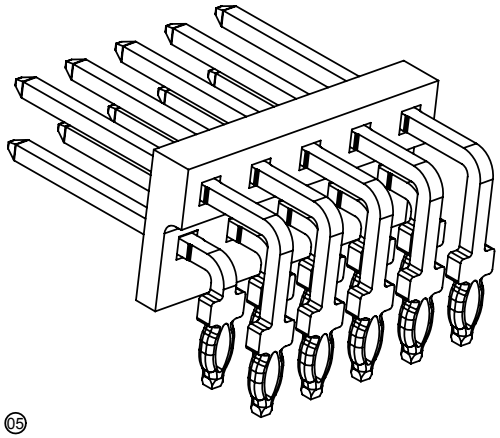

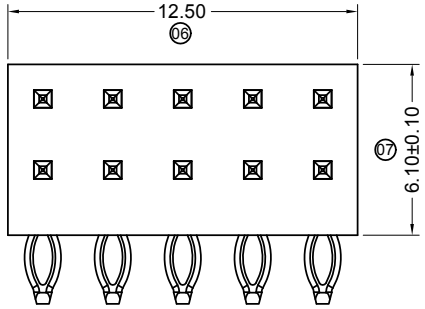

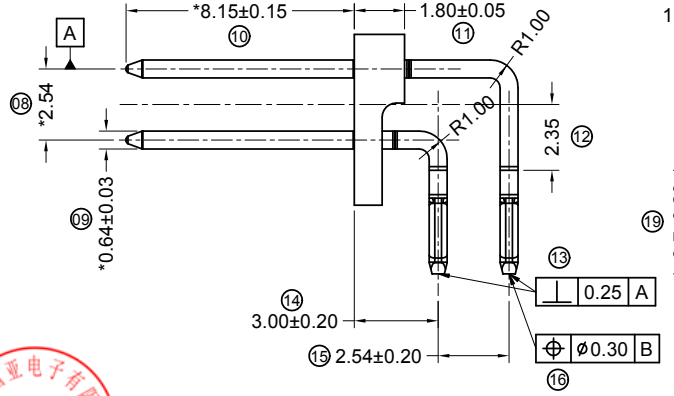

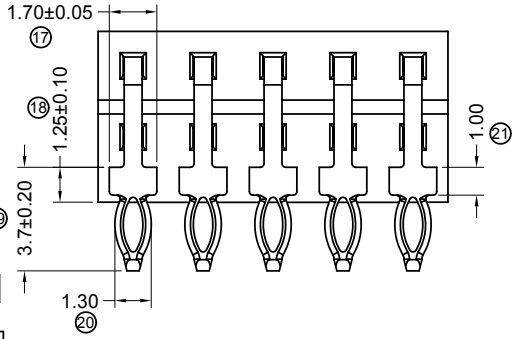

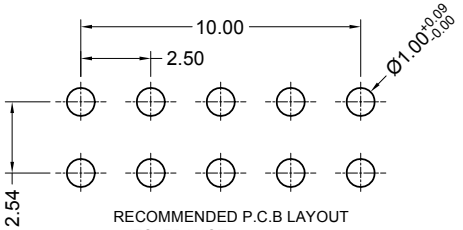

RECOMMENDED P.C.B LAYOUT
(TOLERANCE:±0.05)

Electrical properties
Starting current 4.5A for 3s
Nominel Current 650mA

Temperature properties:
Storage temperature: -40°C ~ +90°C
Operating temperature -40°C ~ +80°C
Funktional temperature: -20°C ~+60°C

Mechanical properties
Push out force from plastic before temperature treatment:
Upper row >= 24N
Lower row >=10N
Assembly force into PCB of each pin:<=110N
Push out force from PCB of each pin: >=20N

Plating:
0.4-1.5μm Sn over 0.8-1.3μm Ni
Surface: Matt

Material:
Plastic: PA4T UL94V-0,Black color.
Metall: Cu-Alloy

DATE	REV	ECN NO.	DESCRIPTION	MODIFY	APPROVAL

GENERAL TOLERANCE
.X ±0.30
.XX ±0.20
.XXX ±0.10
X.° ±2°
PROJECT

GYA Connectors
东莞市国亚电子有限公司
DONGGUO GUOYA ELECTRONICS CO.,LTD

APPROVAL	CHECK	DRAWN	DATE
YANG	TIAN	TIAN	2017/08/24

PART NO.
6503WR-2*05Y-4TSWBKR

TITLE
Pin Header 2 rows 10Pins 90° Press-Fit

UNIT	SCALE	SHEET	REV	NUMBER
mm	1:1	/	A0	A-000